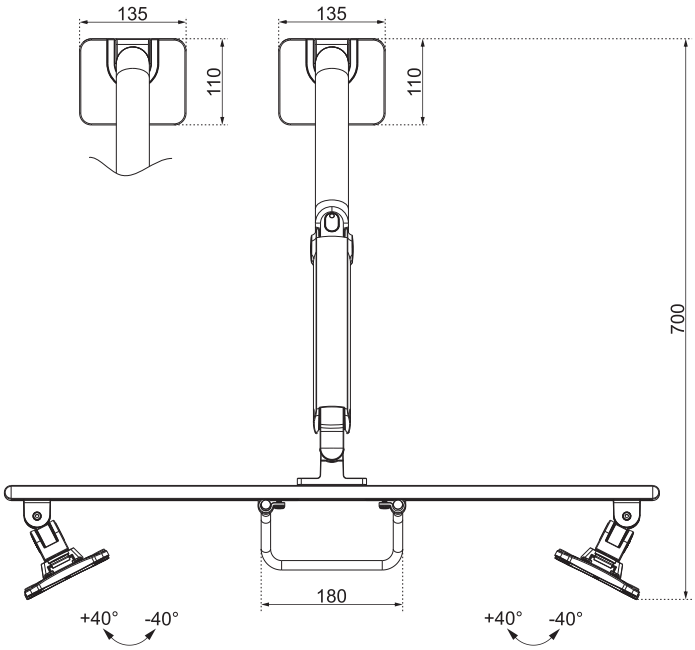
135
110
135
110
700
180
+40°
-40°
+40°
-40°

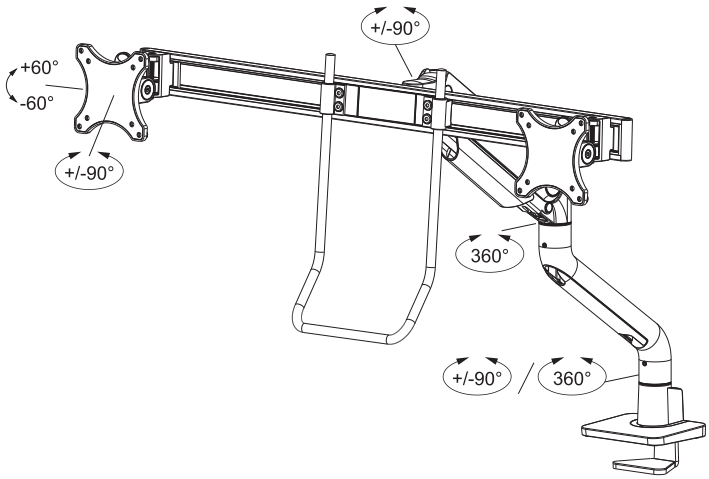
+/-90°
+60°
-60°
+/-90°
360°
+/-90°
360°

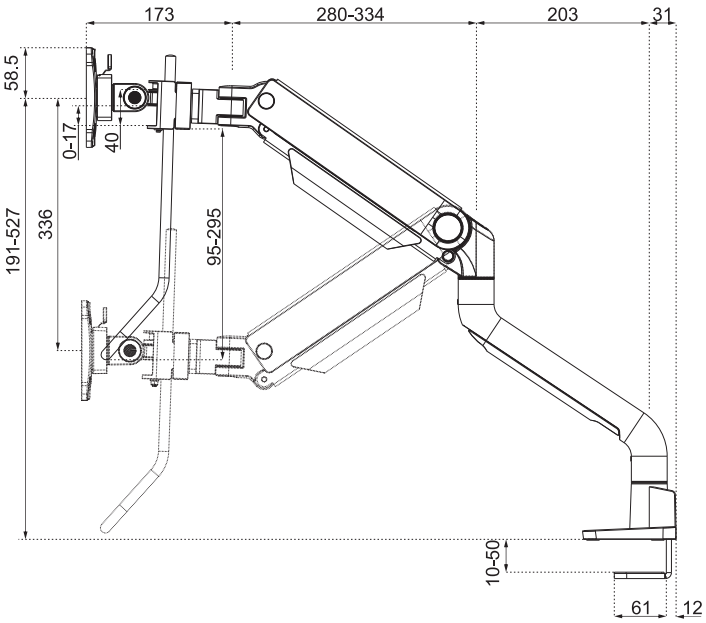
173
280-334
203
31
58.5
0-17
40
191-527
336
95-295
10-50
61
12

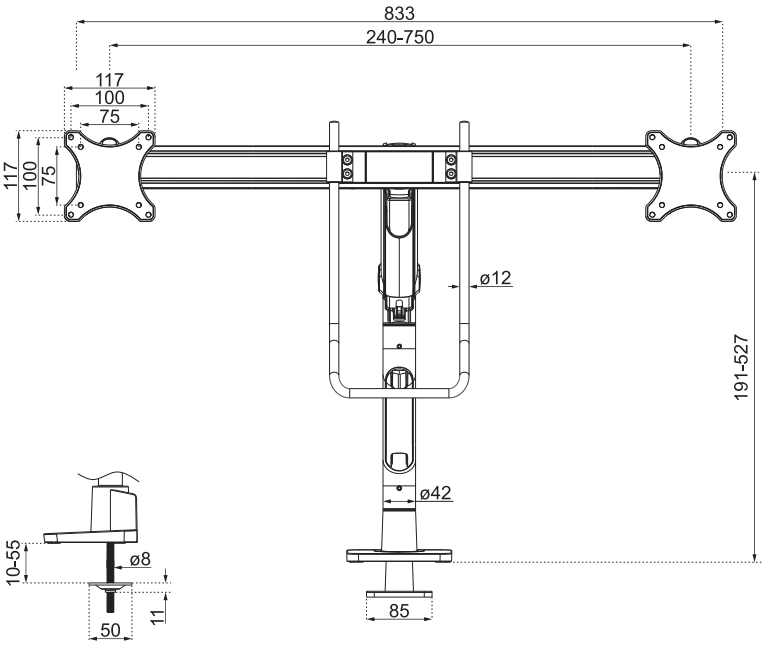
833
240-750
117
100
75
117
100
75
ø12
191-527
ø42
10-55
ø8
11
50
85

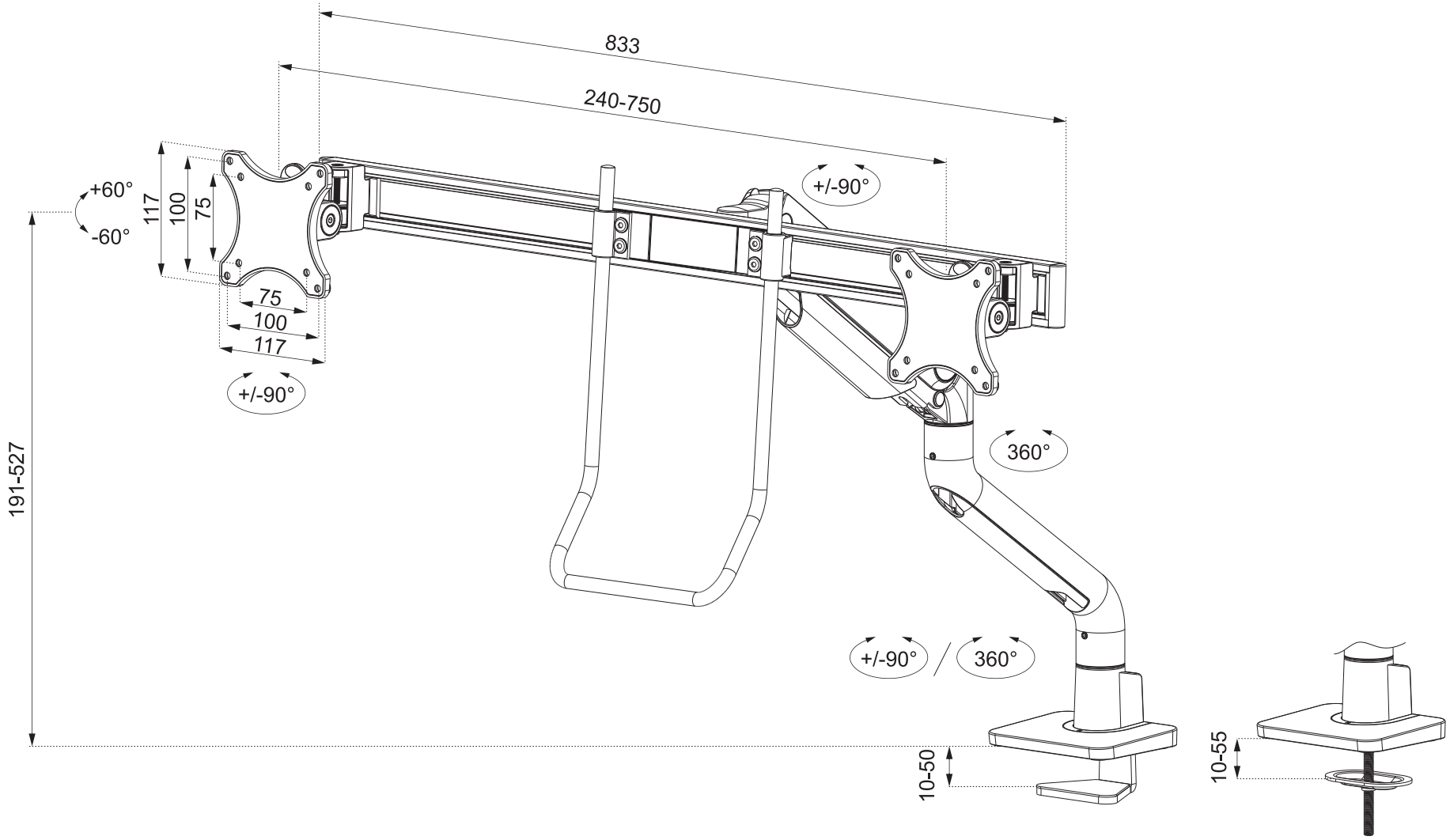

Neomounts

Measuring unit: mm